14

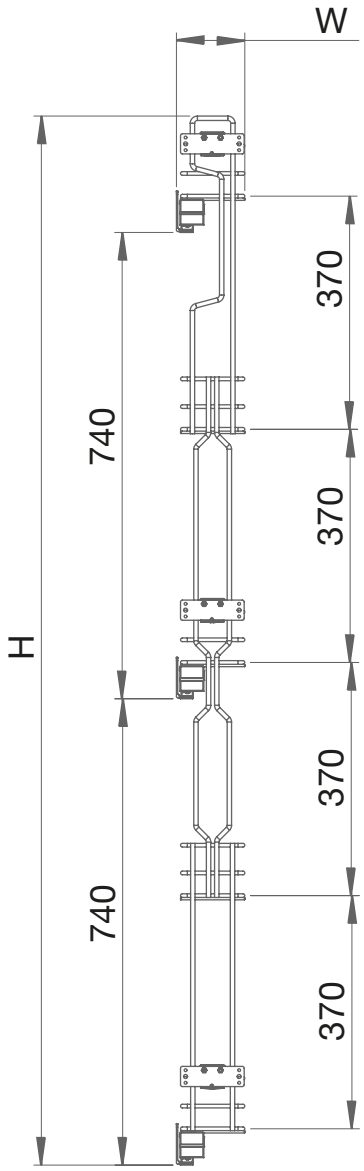

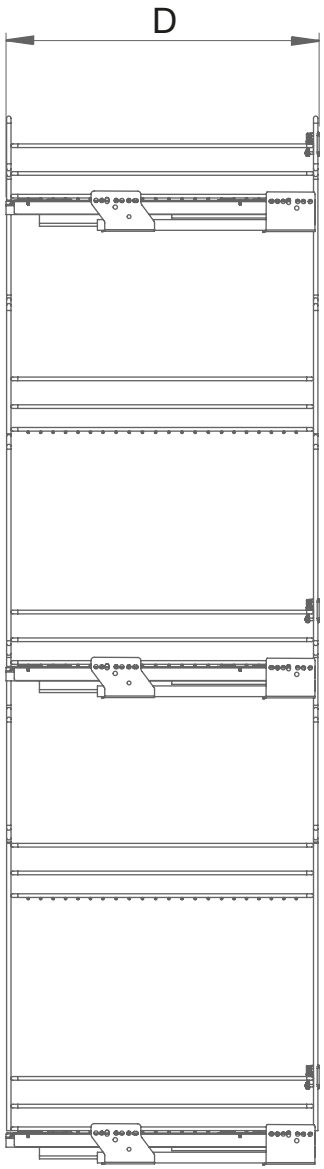

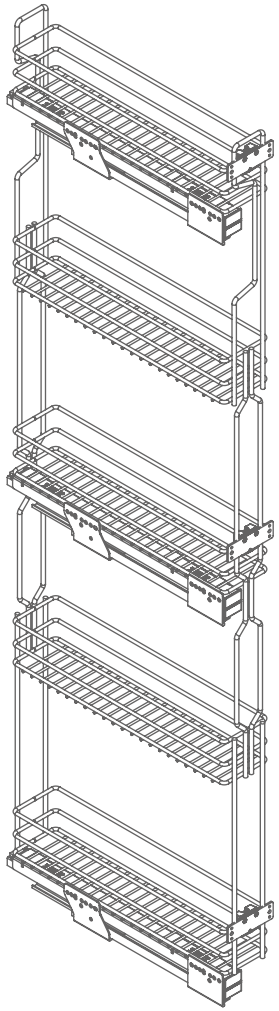

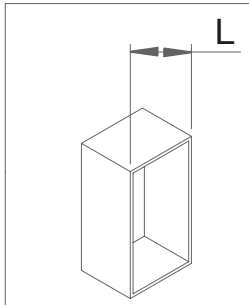

L [mm]	150
W [mm]	108

H [mm]				
01 Hettich	*02 Salice*	*05 Samet*	*06 Blum Tandem*	*07 Grass*
1642	1642	1641	1640	1665

Code	D [mm]				
	01 Hettich	*02 Salice*	*05 Samet*	*06 Blum Tandem*	*07 Grass*
50	496	---	---	---	497