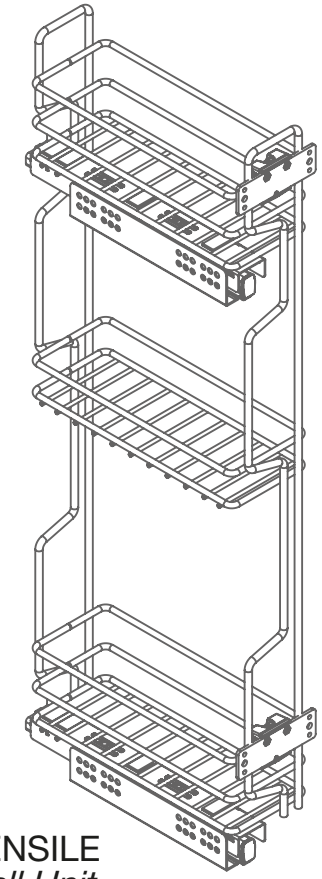

PENSILE
Wall Unit

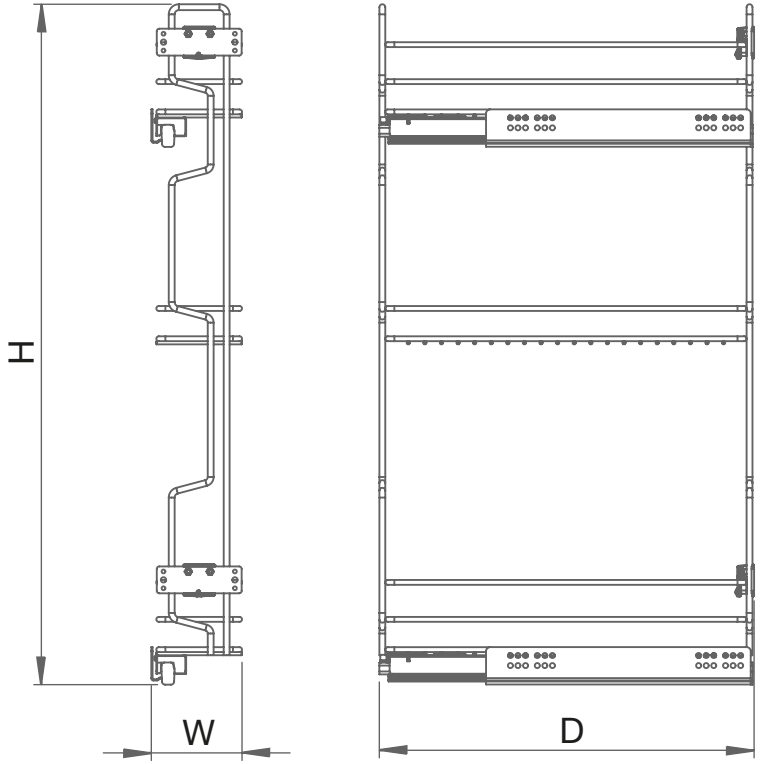

H [mm]					
01 Hettich	*02 Salice*	*03 Blum TandemPlus*	*04 Grass*	*05 Samet*	*06 Blum Tandem*
810	810	813	833	809	808

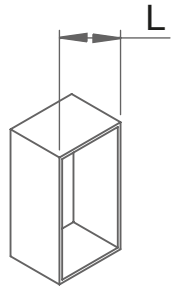

L [mm]	150
W [mm]	108

Type	Code	D [mm]					
		01 Hettich	*02 Salice*	*03 Blum TandemPlus*	*04 Grass*	*05 Samet*	*06 Blum Tandem*
PENSILE *Wall Unit*	28	293	283	---	---	---	---
BASE *Base Unit*	---	---	---	---	---	---	---
	---	---	---	---	---	---	---