818TBE

ellite

Sphera - Colonna estraibile e rotante con guide in carpenteria metallica.

Sphera - Extractable rotating column with metal slides.

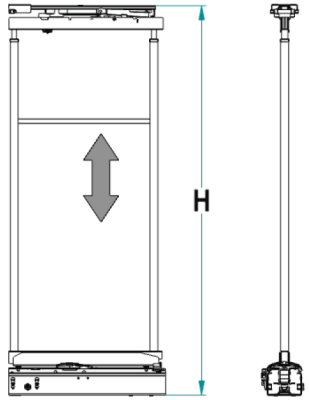

IL CODICE FA RIFERIMENTO ALL'ARTICOLO COMPLETO (STAFFE + GUIDE + TELAIO)
THE CODE REFERS TO THE COMPLETE ARTICLE (SLIDES + FRAME + BRACKETS)

818 T B / 30 AR

Larghezza - *Width*

L [cm]	W [mm]	B [mm]
30	250	240
40	350	340
45	400	390
50	450	440
60	550	540

Altezza - *Height*

Cod.	H min [mm]	H Max [mm]	Cesti / Baskets *
B - Bassa/Low	1260	1620	3

Finiture / *Finishing* -

A	RAL7035
CB	"Cromo Bianco"
AR	"Ardesia" (RAL7043)
CH	"Champagne"

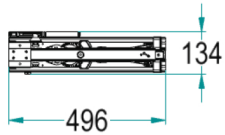

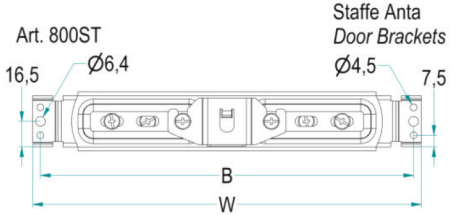

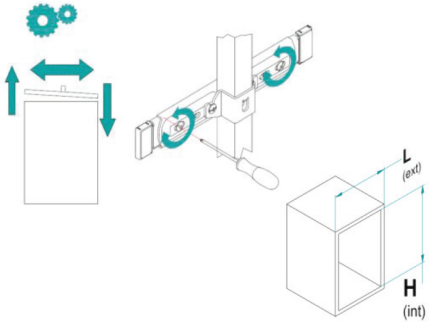

Cod.	RAL 7035	RAL 7043	Champagne
800ST130	-	AR	CH
800ST230	-	AR	CH
800ST140	-	AR	CH
800ST240	-	AR	CH
800ST145	-	AR	CH
800ST245	-	AR	CH
800ST150	-	AR	CH
800ST250	-	AR	CH
800ST160	-	AR	CH
800ST260	-	AR	CH

* 800ST **1** 30 - Imballo ad 1 pezzo / 1 piece per box
800ST **2** 30 - Imballo a 2 pezzi / 2 pieces per box

Soft-Close di serie / Soft-Close as standard